PRODUCTION TABLE	
NO	WORKBENCH
01	POLYESTER

MODEL : TURBIDRON NORM PLUS - 1200	PRODUCT CODE: 021514
FILTRATION AREA : 1,13 m²	FILTER DIAMETER : 1200 mm
FILTRATION AREA : 2000L	FILTRATION MEDIA : 0,4 - 0,8 mm
OPERATION PRESSURE : 2,5 kg/cm²	TEST PRESSURE : 4 kg/cm²
FLOW RATE: 34 m³/h	FILTRATION RATE: 30 m³/h/m²
CONNECTION: 75mm	
PRODUCT YEAR : 2023	
COLOR CODE :	CUSTOMER NAME: AQUAMASTER
SİPARİŞ NUMARASI :	

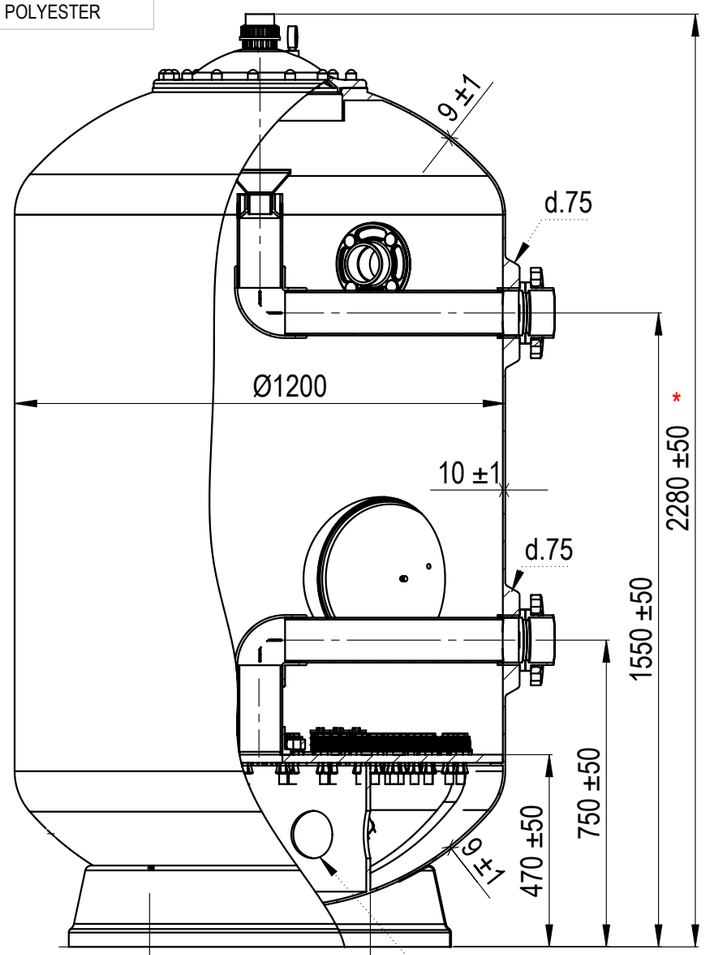

1 pcs nozzle plate support holes Ø114mm

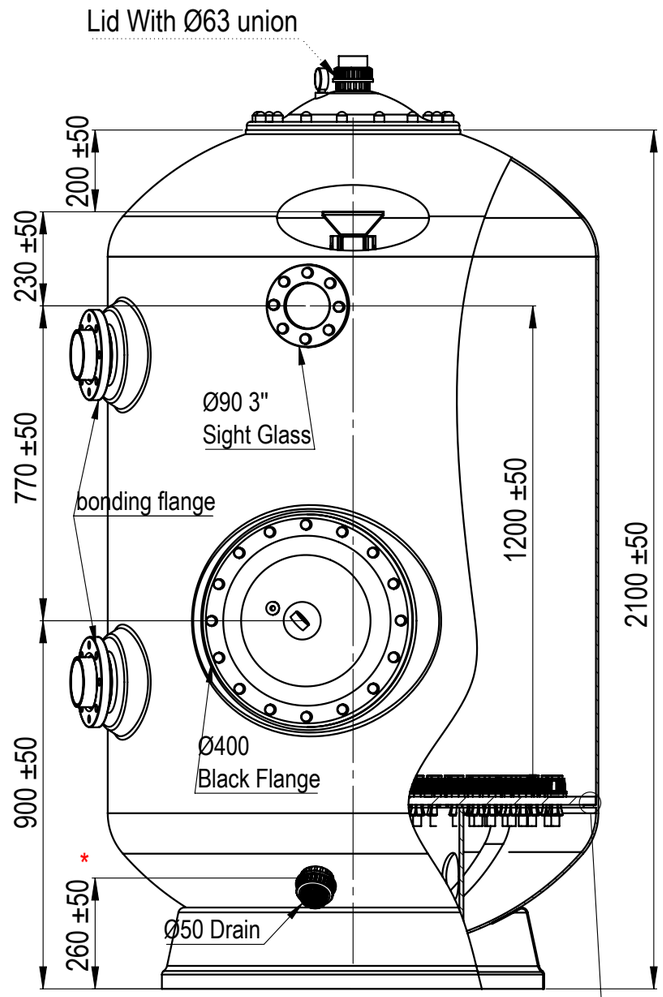

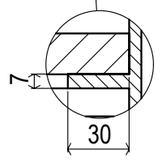

7x30 mm FRP nozzle plate support details

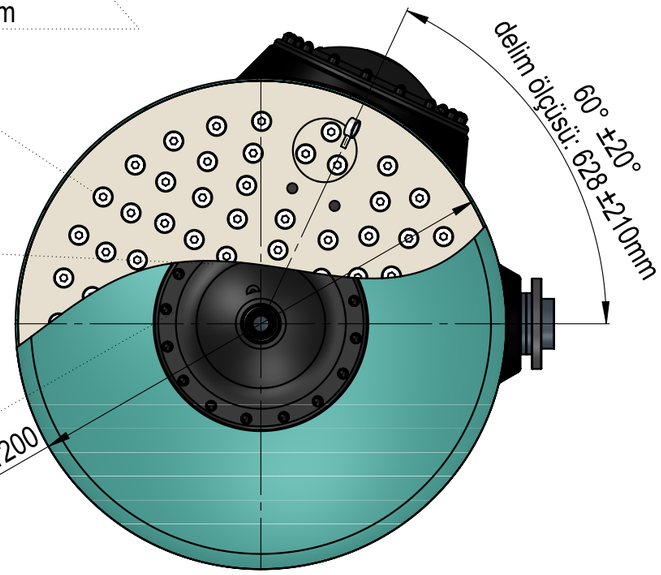

Wall Thickness Cylindrical :10 mm
Wall Thickness Conycal: 9 mm

Rev. No / Rev. No	Rev. Tarihi / Rev. Date	Revizyon Notu / Revision Note		Rev.Ad-Soyad / Rev.Name-Surname		İmza / Signature	
Revizyon / Revision	Tarihi / Date	Ad-Soyad / Name-Surname	İmza / Signature	Ağırlık (gr) / Weight (gr)		Yoğunluk g/cm3	Stok Kodu Stock No
Çizen / Designed By	22.12.2023	MELTEM KILIÇ		Ham / Rav	İşlem / Net	...	
Denetleme / Inspection By	...	İBRAHİM KAYA		...	...	Tür ...	021514
Kontrol / Checked By	...	İBRAHİM KAYA				Malzeme / Metarial ...	Form / Form
Onay / Aproved By	...	İBRAHİM KAYA					
Ölçek / Scale: 1/12	Parça Adı / Part Name	TURBIDRON NORM PLUS - 1200				Numune Görünüşü ...	A3

GEMAŞ